RONETIX
DEVELOPMENT TOOLS

i.MX8MM-COMPACT-MB

Base board for the CPU Modules:

i.MX8MM-COMPACT-CM

i.MX8MN-COMPACT-CM

Datasheet, rev 1.0

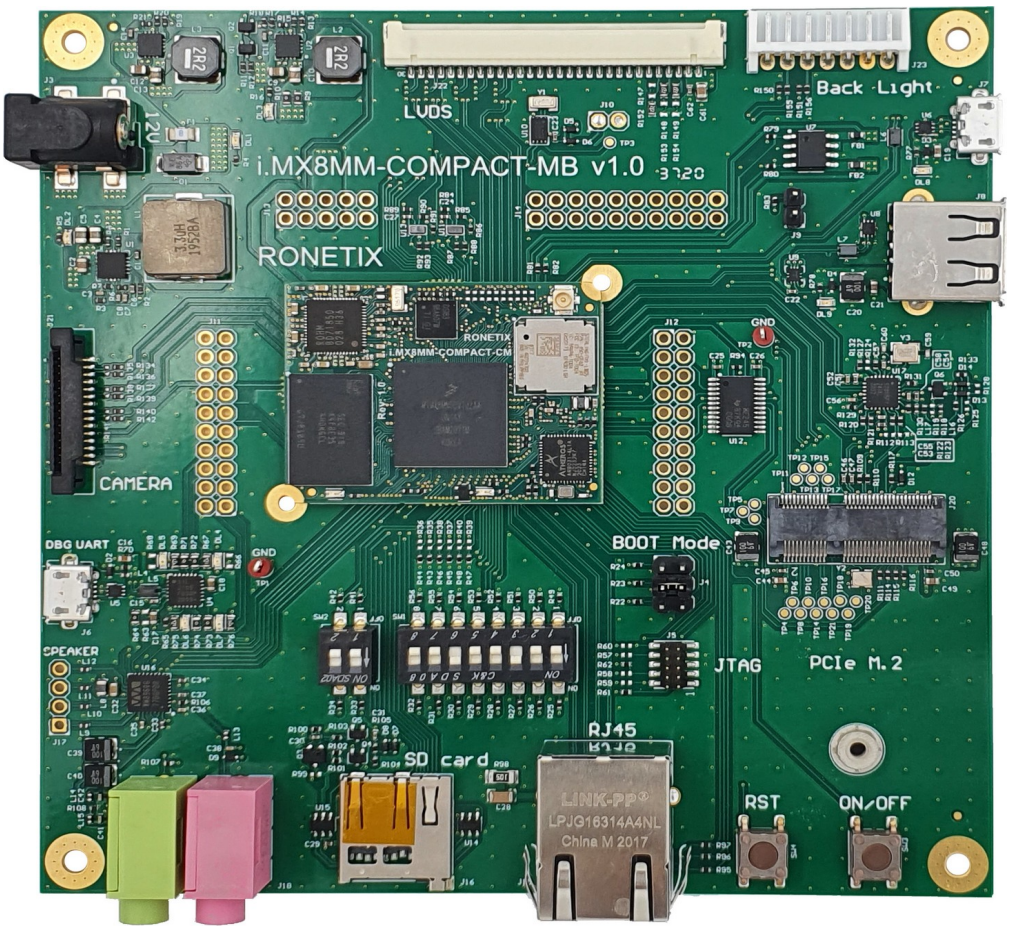

Ronetix has made every attempt to ensure that the information in this document is accurate and complete. However, Ronetix assumes no responsibility for any errors, omissions, or for any consequences resulting from the use of the information included herein or the equipment it accompanies. Ronetix reserves the right to make changes in its products and specifications at any time without notice. Any software described in this document is furnished under a license or non-disclosure agreement. It is against the law to copy this software on magnetic tape, disk, or other medium for any purpose other than the licensee's personal use. Product and company names herein may be the trademarks of their respective owners.

Ronetix Development Tools GmbH
Hirschstettner Str. 19/Z110
1220 Vienna
Austria
www.ronetix.at

1. Document Revision History

Revision	Date	Notes
1.0	15-Sep-2021	Initial release

2. Table of Contents

Table of Contents

1. Document Revision History....3
2. Table of Contents....3
3. Overview....5
3.1 General Information....5
3.1.1 Reference Documents....5
3.1.2 Board Layout....5
3.2 Highlights....6
3.3 Block Diagram....7
3.4 i.MX8MM-COMPACT-MB Connectors....8
4. Interface description....9
4.1 Power supply....9
4.1.1 Power supply input....9
4.1.2 Power out headers....9
4.2 Buttons....10
4.2.1 ON/OFF button....11
4.2.2 RST button....11
4.2.3 Boot Mode....11
4.2.4 Boot configuration....11
4.3 LEDs....12
4.4 Ethernet....13
4.5 USB Interface....13
4.5.1 USB 2.0 Host Type A, J8....14
4.6 SD card....15
4.7 LVDS....17
4.8 Audio....17
4.9 Camera....19

4.10 USB debug UART....20
4.11 GPIO....20
4.12 RTC Clock....21
4.13 PCIe M.2....22
4.14 JTAG....22
5. Warranty Terms....23

3. Overview

3.1 General Information

The **i.MX8MM-COMPACT-MB** base board is designed to explore the functionality and performance of the CPU Modules i.MX8MM-COMPACT-CM and i.MX8MN-COMPACT-CM.

3.1.1 Reference Documents

i.MX8MM-COMPACT-MB – Base board downloads:

http://download.ronetix.at/boards/doc/i.MX8MM-COMPACT-MB

i.MX8MM-COMPACT-CM – CPU Module downloads:

http://download.ronetix.at/boards/doc/i.MX8MM-COMPACT-CM

3.1.2 Board Layout

The i.MX8MM-COMPACT-MB physical dimensions are 120.0 x 120.0 mm.

3.2 Highlights

The i.MX8MM-COMPACT-MB base board provides the following features and interfaces:

- two Hirose DF040 connectors compatible to i.MX8MM-COMPACT-CM
- Ethernet 10/100/1000BaseT – RJ45
- USB2.0 Host Type A
- USB2.0 Micro AB
- USB debug UART2 and UART4
- micro-SD card slot
- M.2 PCIe Connector
- LVDS Display interface
- Camera – MIPI-CSI for OV5640
- Audio
  - 3.5mm Headphones jack
  - 3.5mm Microphone jack
  - 1W Speakers
- GPIO headers

Refer to i.MX8MM-COMPACT-CM datasheet for pin-out assignments.

3.3 Block Diagram

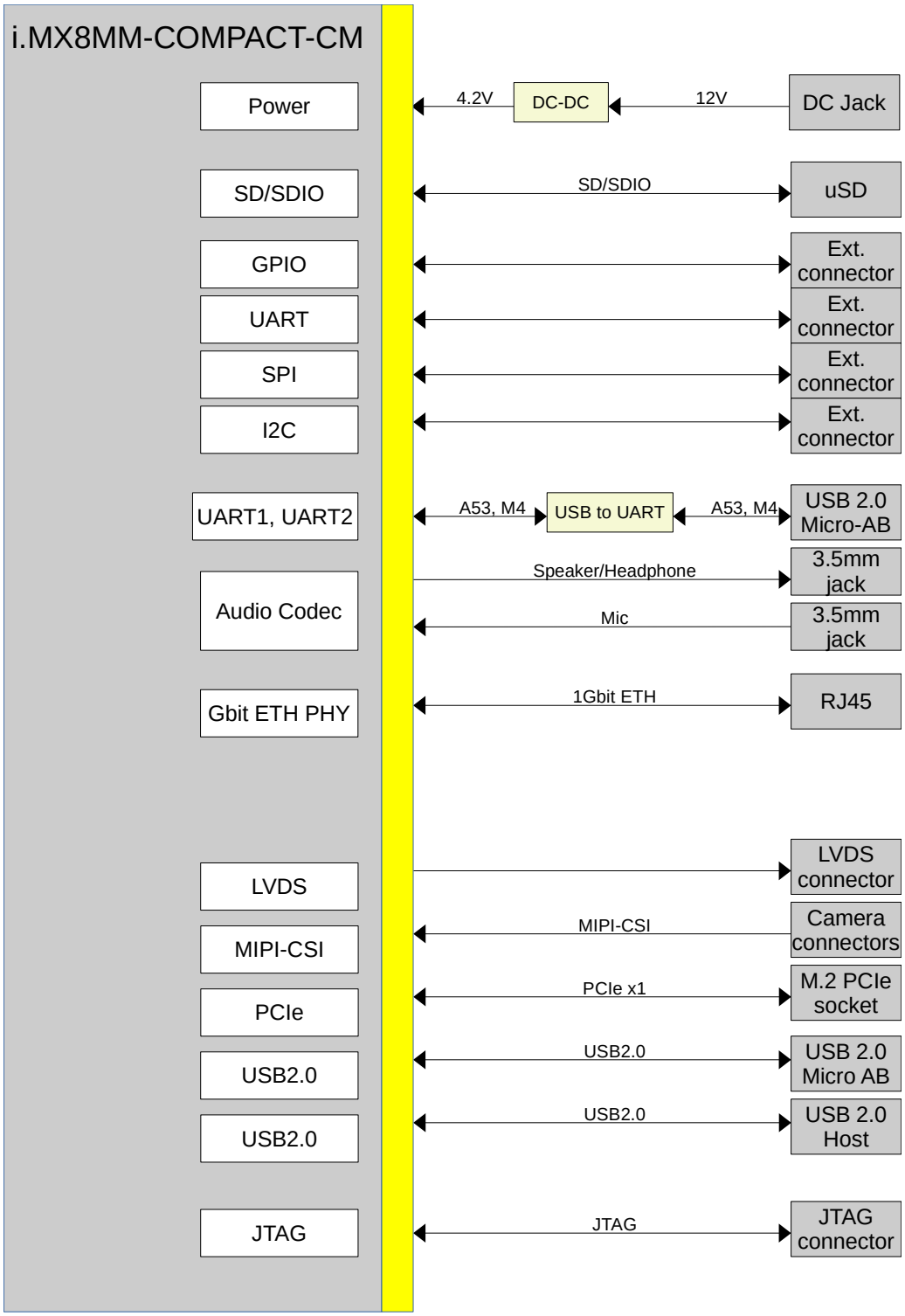

3.4 i.MX8MM-COMPACT-MB Connectors

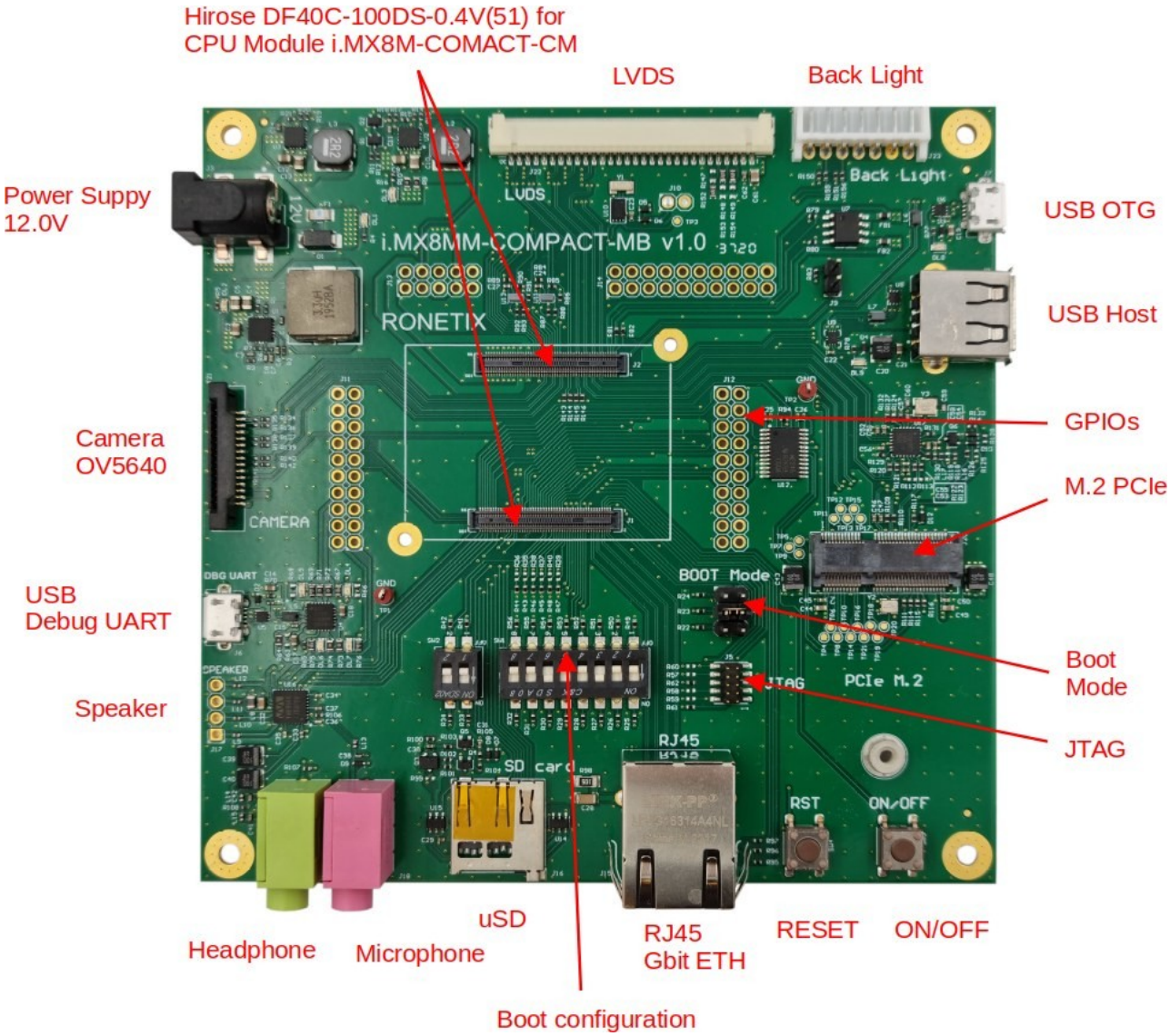

Figure 3.1:

Reference	Function	Type
J1, J2	i.MX8MM-COMPACT-CM connector	Hirose DF40C-100DS-0.4V(51)
J3	Power Supply	DC Jack, 2.1mm
J4	Boot Mode	Header 3x2, 2.54mm
J5	JTAG	Header 5x2, 1.27mm
J6	USB Debug UART	USB Micro-AB
J7	USB 2.0 OTG	USB 2.0 Micro AB

Reference	Function	Type
J8	USB Host	USB Type-A
J9	USB2 switch	Jumper 2.54mm
J10	RTC clock external battery	Header 1x2, 2.54mm
J11, J12, J14	GPIOs	Header 10x2, 2.54mm
J13	Power supplies	Header 5x2, 2.54mm
J15	Ethernet	RJ45
J16	Micro SD	Micro SD
J17	Speakers	Header 2x2, 2.54mm
J18	Microphone - Pink	Audio jack 3.5mm
J19	Headphones - Green	Audio jack 3.5mm
J20	M.2 PCIe	MDT420E01001
J21	Camera OV5640	15-pin, FPC
J22	LVDS	30pin, DF14-30P-1.25H
J23	Display back light	7-pin, S7B-EH

4. Interface description

4.1 Power supply

4.1.1 Power supply input

i.MX8MM-COMPACT-MB is powered by a +12V power supply connected through a 2.1mm barrel jack.

4.1.2 Power out headers

- **J13**, 5x2 2.54mm header provides supplies generated on the base board.

J13, PIN	Label	Voltage	Description
1	VIN_4V2	4.2V	Power supply provided to SoM (Hirose DF040)
2	VDD_1V8_CM	1.8V	Provided from SoM, generated by PMIC: 1.8V/0.5A – i.MX8MM-COMPACT-CM
3	VCC_3V3	3.3V	Generated from 12V through 3A DC-DC converter
4	VDD_3V3_CM	3.3V	Provided from SoM, generated by PMIC: 3.3V/1.5A – i.MX8MM-COMPACT-CM
5	VCC_5V0	5.0V	Generated from 12V through 3A DC-DC converter
6	POR_B		Output signal from BD71847AMWV located on SoM
7, 8, 9, 10	GND		

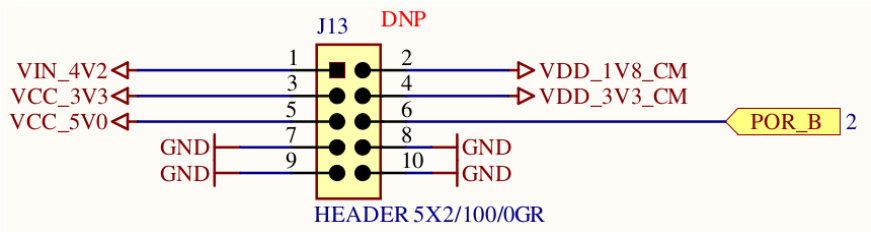

Figure 4.1: Power out connector

4.2 Buttons

i.MX8MM-COMPACT-MB implements two buttons.

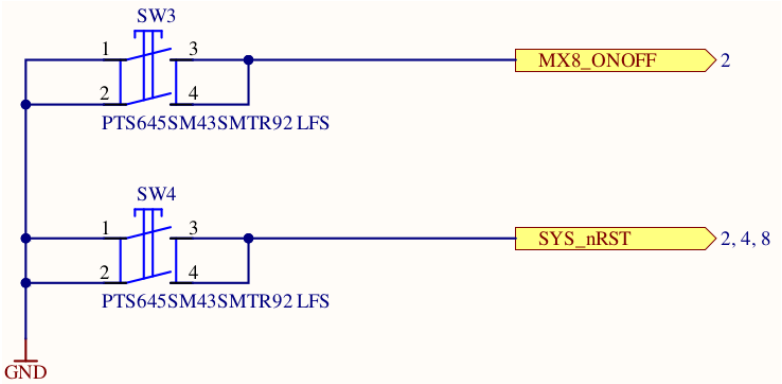

Figure 4.2: Buttons

4.2.1 ON/OFF button

The ON/OFF button provides following functionality:

- Long press (> 5 sec.) - hardware shutdown without possibility for software wake-up
- Short press (< 5 sec.) - software shutdown
- Short press in OFF state – restart

4.2.2 RST button

The RST button performs a system reset.

It is connected to PWRON signal on PMIC BD71847AMWV located on the SoM.

4.2.3 Boot Mode

J4 sets the boot mode of the CPU:

- i.MX8M-MINI

J4, 3-4	J4, 1-2	Boot mode – i.MX8M-MINI
open	open	Boot from Fuses
open	close	Serial download
close	open	Internal boot
close	close	Test mode

- i.MX8M-NANO

J4, 3-4	J4, 1-2	Boot mode – i.MX8M-NANO
open	open	Boot from Fuses
open	close	Serial download
close	open	uSDHC3, eMMC
close	close	uSDHC2, Micro SD

4.2.4 Boot configuration

Boot configuration switches SW1, SW2 set the boot source and sequence:

BOOT from SD2 card i.MX8MM:
SW1: 3,5 - ON; all other OFF
SW4: 1,2 - ON

BOOT from eMMC i.MX8MM (SDHC3):
SW1: 4,6 - ON; all other OFF
SW4: 1, 2 - ON

Figure 4.3: Boot configuration i.MX8M-MINI

BOOT from SD card i.MX8MN (SDHC2):
BOOT_MODE = 011
SW1: doesn't matter
SW4: doesn't matter

BOOT from eMMC i.MX8MN (SDHC3):
BOOT_MODE = 010
SW1: doesn't matter
SW4: doesn't matter

Figure 4.4: Boot configuration i.MX8M-NANO

4.3 LEDs

LED	Color	Description
DL1	green	ON when input 12V DC power is provided
DL2	red	ON when VIN_4V2 is available
DL3	red	ON when VCC_3V3 is available
DL4	green	RxLED on USB debug UART4 bridge
DL5	red	TxLED on USB debug UART4 bridge
DL6	green	RxLED on USB debug UART2 bridge
DL7	red	TxLED on USB debug UART2 bridge

4.4 Ethernet

One Gigabit Ethernet port is available: RJ45 connector J15 with integrated magnetics and LEDs.

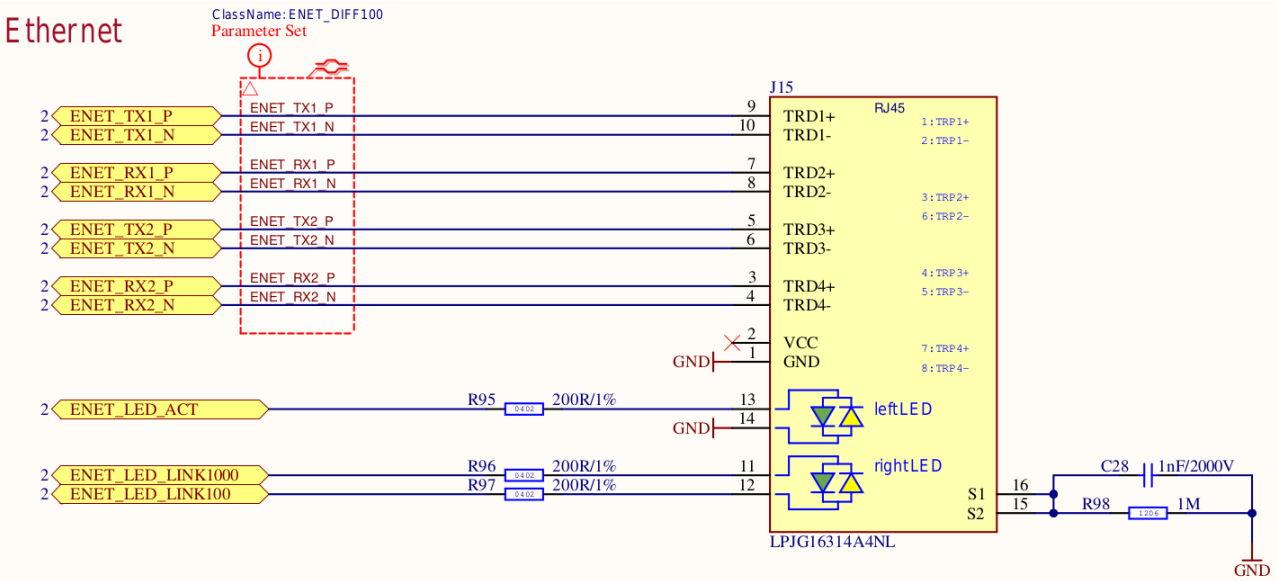

Figure 4.5: RJ45

4.5 USB Interface

The i.MX8MM-COMPACT-CM features two USB2.0 ports, i.MX8MM-COMAPCT-CM has two USB2.0 ports and i.MX8MN-COMPACT-CM has one USB2.0 port.

On the base board the first USB port is connected to a USB2.0 OTG Micro AB connector – J7, the second port is connected to a USB2.0 Host Type A connector – J8.

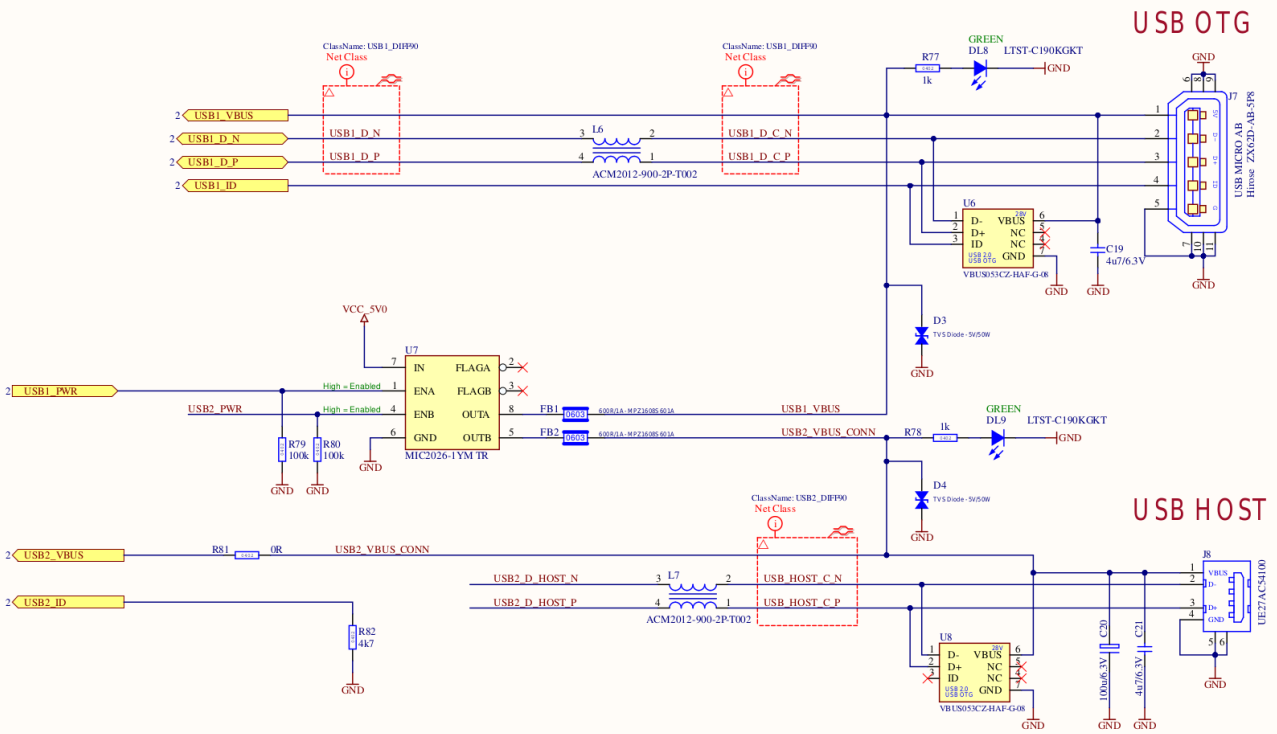

Figure 4.6: USB OTG and USB Host

4.5.1 USB 2.0 Host Type A, J8

The USB2.0 signals can be multiplexed to J8 or to the WiFi module on SoM (through Hirose DF040 connector).

J9	Multiplex mode
close	USB2_D routed to BT module on i.MX8MM-COMPACT-CM
open	USB2_D routed to USB 2.0 Host Type A connector (default)

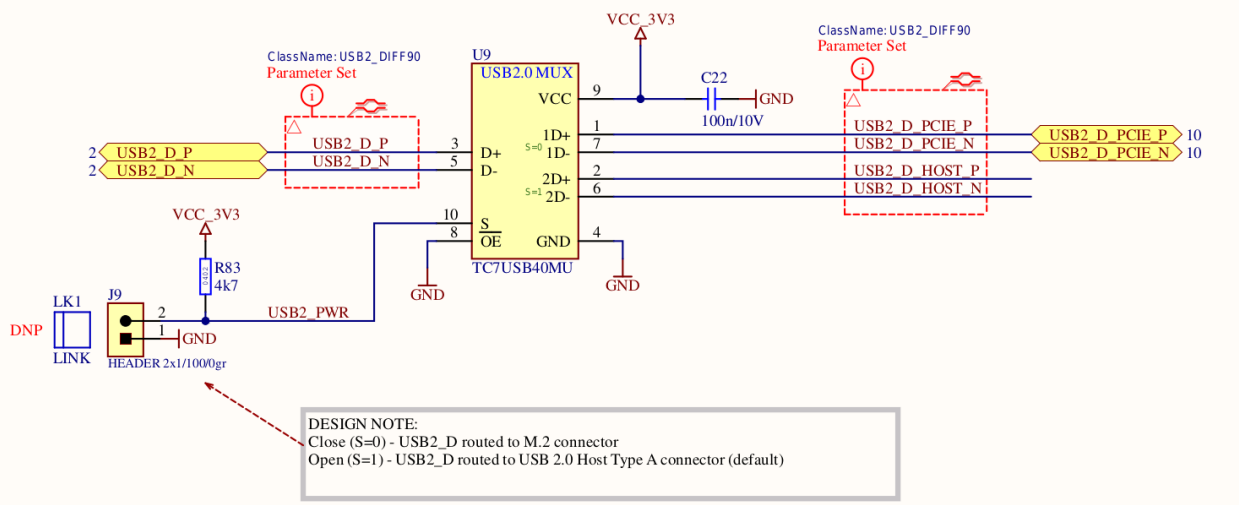

Figure 4.7: USB2 multiplexing

4.6 SD card

The i.MX8MM-COMPACT-MB board features a SD card socket which can be used as boot device or storage. Please note that the hardware supported card detect function is implemented and hardware write protect feature is not available.

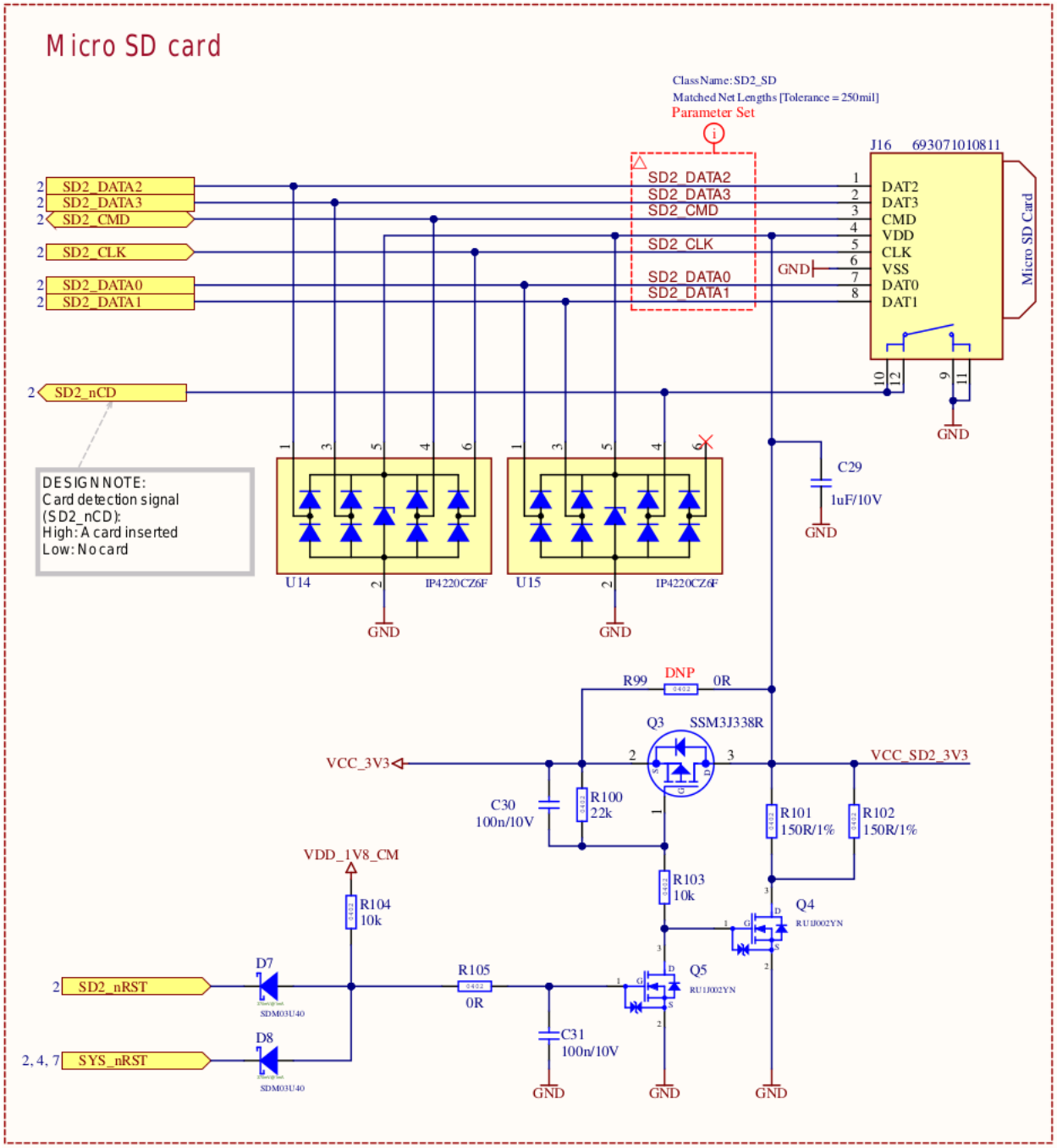

Figure 4.8: SD card

4.7 LVDS

The i.MX8MM-COMPACT-MB board exposes a 4 data lane LVDS interface driven by the MIPI-DSI to LVDS bridge assembled on the i.MX8MM-COMPACT-CM. The interface is exposed to a 30 pin connector for connecting G101ICE-L01, 10.1", 1280x800 LVDS LCD display.

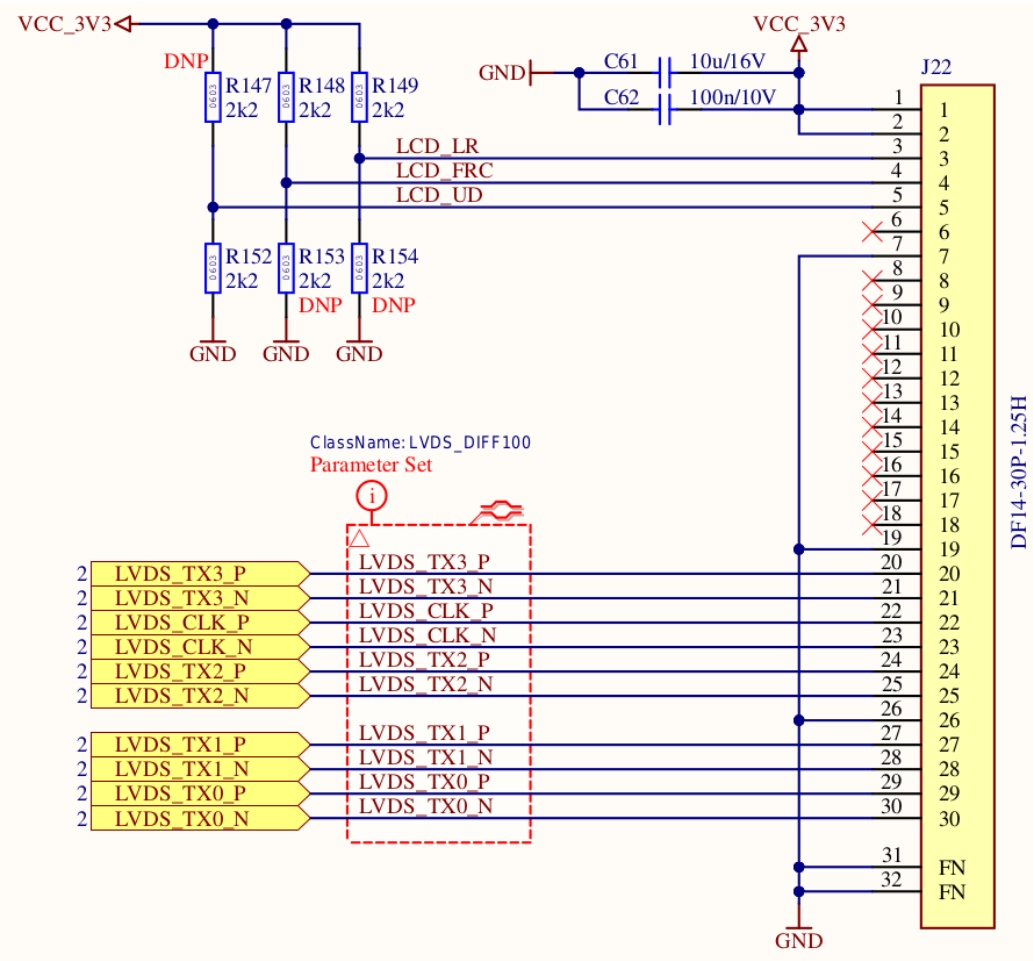

Figure 4.9: LVDS

4.8 Audio

i.MX8MM-COMPACT-MB implements an audio codec WM8960. The WM8960 is a low power stereo codec featuring Class D speaker drivers to provide 1W per channel into 8Ω loads. External component requirements are drastically reduced as no separate microphone, speaker or headphone amplifiers are required. Advanced on-chip digital signal processing performs automatic level control for the microphone or line input. Stereo 24-bit Delta Sigma converters are used with low power

over-sampling digital interpolation and decimation filters and a flexible digital audio interface. The main clock can be input directly or generated internally by an onboard PLL, supporting most commonly used clocking schemes.

The WM8960 supports the following features:

- Stereo class D speaker driver, 1W per channel
- On-chip headphone driver 40mW output power into 16Ω
- Microphone interface
- Pop and click suppression
- DAC SNR 98 dB ('A' weighted), THD -84 dB at 48 kHz, 3.3V
- ADC SNR 95 dB ('A' weighted),THD -82 dB at 48 kHz, 3.3V
- Programmable ALC / limiter and noise gate

The i.MX8MM-COMPACT-MB board features two 3.5mm jacks:

- Headphones
- Header 2x2, 2.54mm for speakers
- Microphone

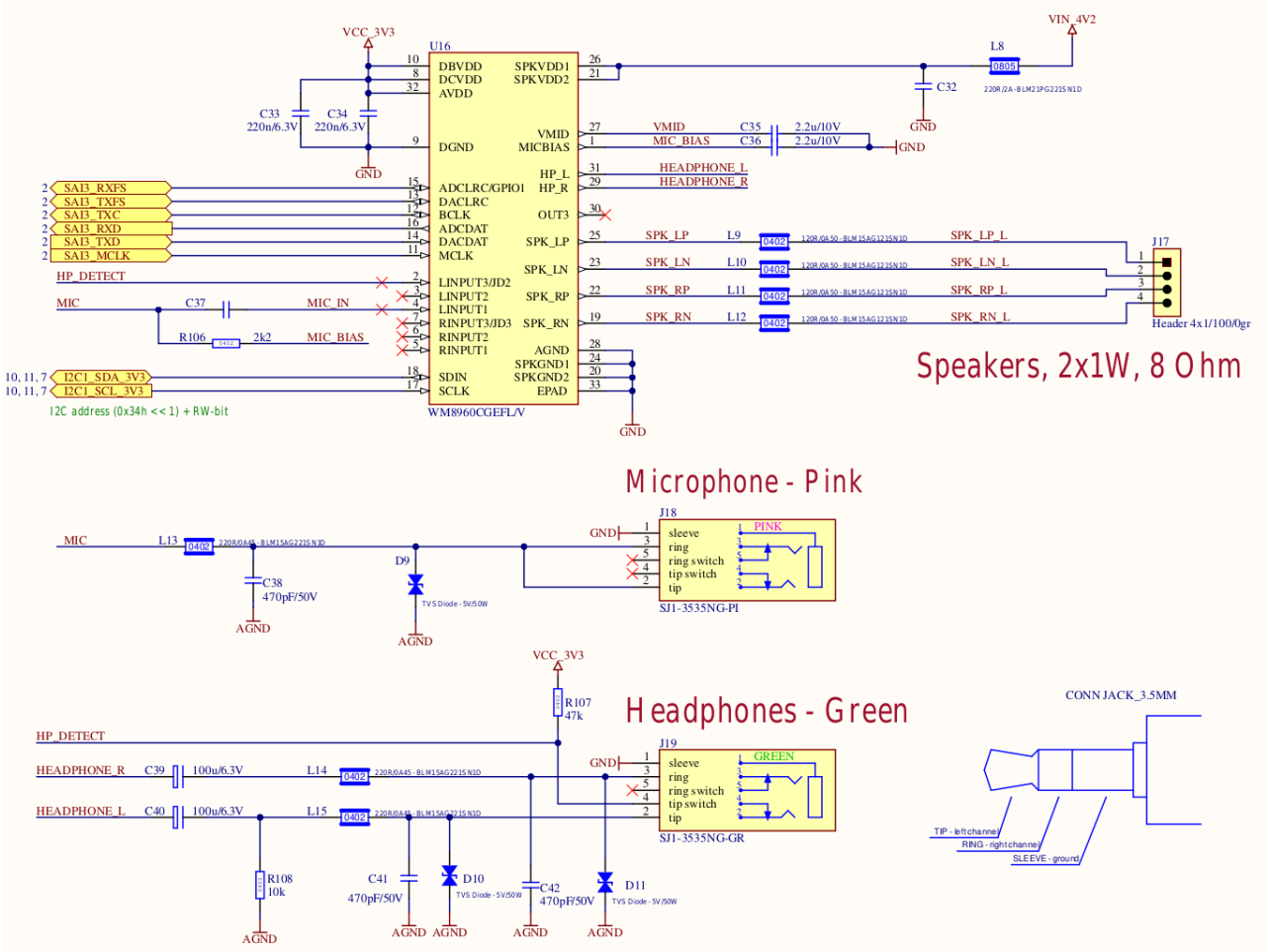

Figure 4.10: Audio

4.9 Camera

The i.MX8MM-COMPACT-MB supports one camera sensor input using a 15-pin FPC connector which is suitable for PCAM 5C, 5 MP MIPI camera module with OV5640 sensor.

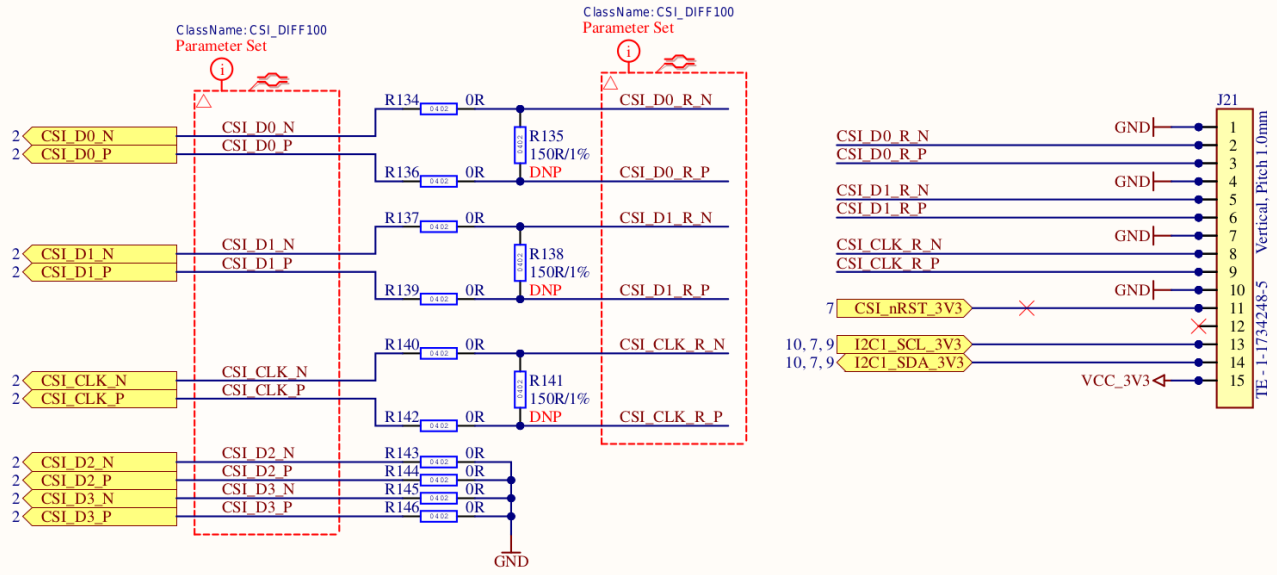

Figure 4.11: Camera

4.10 USB debug UART

i.MX8MM-COMPACT-MB implements a USB to UART bridge (CP2105) which can be used to interface with the UART2 and UART4 of the CPU. Usually UART4 is used for debugging of Cortex-M4 core, while the UART2 is used for debugging of Cortex-A53 core. J6, USB Micro-AB connected is connected to the USB-UART bridge. Four LEDs show Tx/Rx activity on both UART ports.

4.11 GPIO

Various GPIOs are available on standard headers:

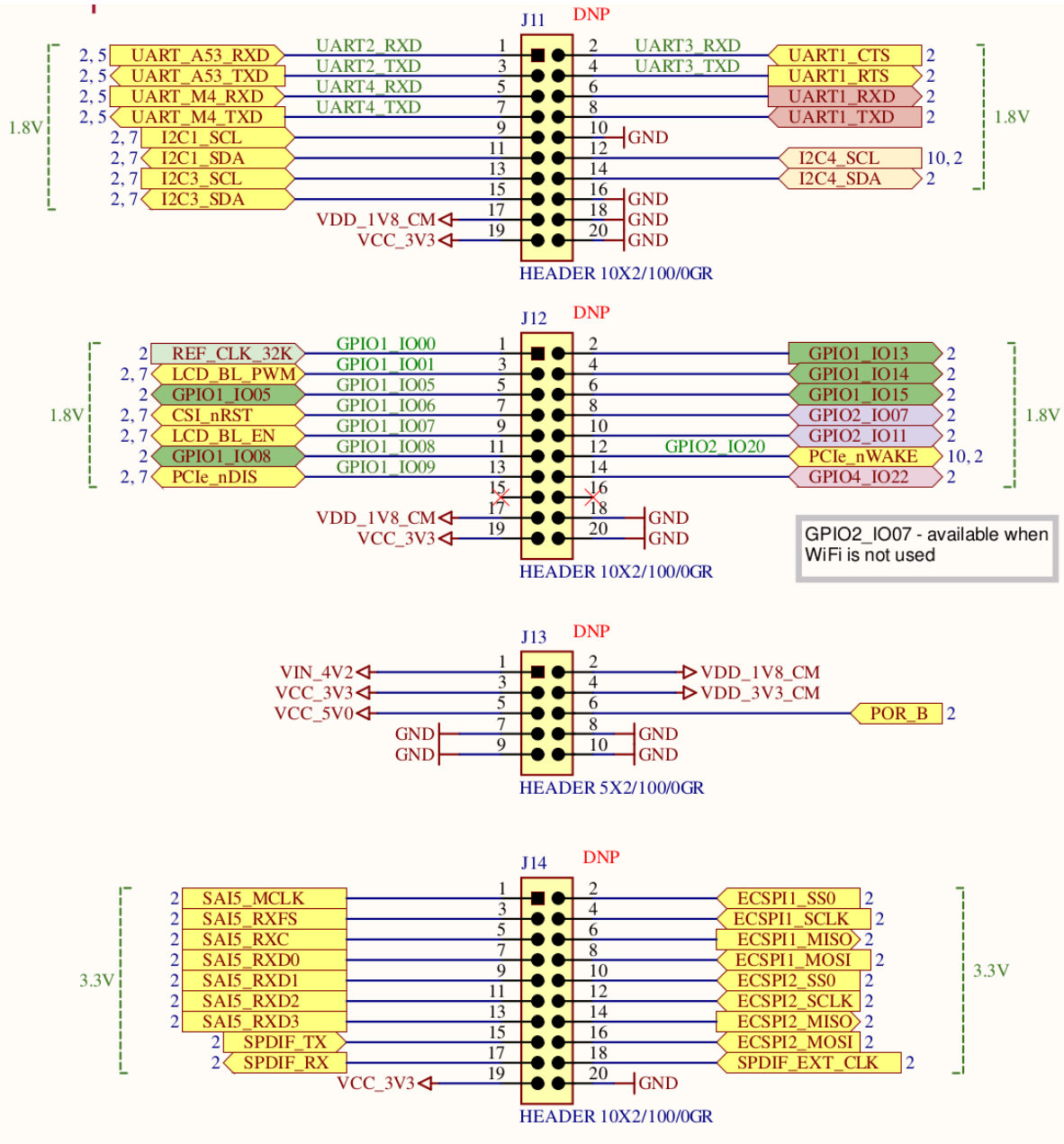

Figure 4.12: GPIO

4.12 RTC Clock

i.MX8MM-COMPACT-MB implements a I2C RTC Clock connected to I2C1. An external 3.0V battery is required – J10.

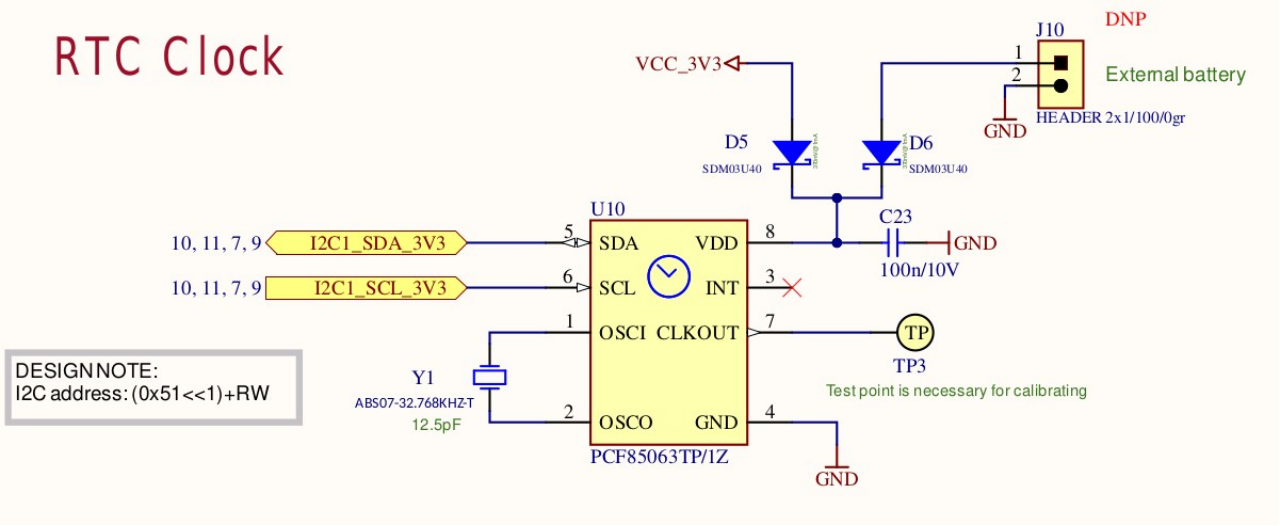

Figure 4.13: RTC clock

4.13 PCIe M.2

The i.MX8MM-COMPACT-MB exposes one M.2 connector - J20. This port can be used for Wi-Fi/Bluetooth cards or some 3G/4G cards.

4.14 JTAG

The i.MX8MM-COMPACT-MB exposes the CPU JTAG signals through a standard 1.27mm 10 pin connector – J5.

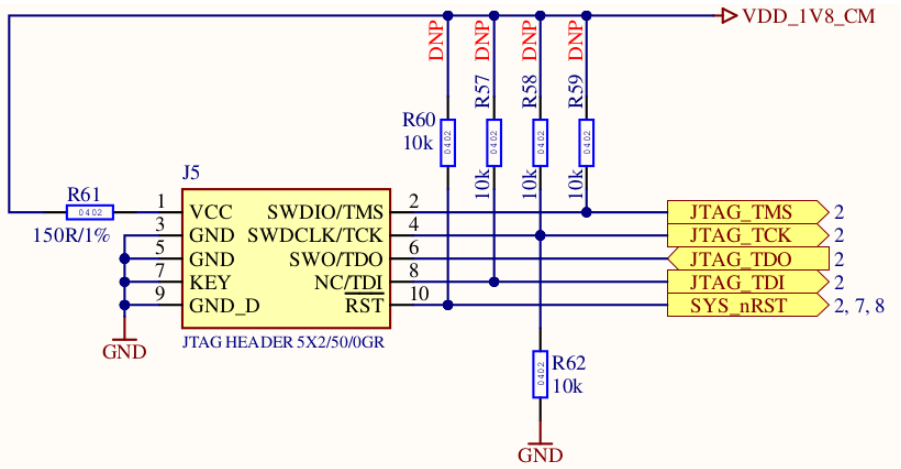

Figure 4.14: JTAG

5. Warranty Terms

Ronetix guarantees hardware products against defects in workmanship and material for a period of one (1) year from the date of shipment. Your sole remedy and Ronetix's sole liability shall be for Ronetix, at its sole discretion, to either repair or replace the defective hardware product at no charge or to refund the purchase price. Shipment costs in both directions are the responsibility of the customer. This warranty is void if the hardware product has been altered or damaged by accident, misuse or abuse.

Disclaimer of Warranty

THIS WARRANTY IS MADE IN LIEU OF ANY OTHER WARRANTY, WHETHER EXPRESSED, OR IMPLIED, OF MERCHANT-ABILITY, FITNESS FOR A SPECIFIC PURPOSE, NON-INFRINGEMENT OR THEIR EQUIVALENTS UNDER THE LAWS OF ANY JURISDICTION, EXCEPT THE WARRANTY EXPRESSLY STATED HEREIN. THE REMEDIES SET FORTH HEREIN SHALL BE THE SOLE AND EXCLUSIVE REMEDIES OF ANY PURCHASER WITH RESPECT TO ANY DEFECTIVE PRODUCT.

Limitation on Liability

UNDER NO CIRCUMSTANCES SHALL RONETIX BE LIABLE FOR ANY LOSS, DAMAGE OR EXPENSE SUFFERED OR INCURRED WITH RESPECT TO ANY DEFECTIVE PRODUCT. IN NO EVENT SHALL RONETIX BE LIABLE FOR ANY INCIDENTAL OR CONSEQUENTIAL DAMAGES THAT YOU MAY SUFFER DIRECTLY OR INDIRECTLY FROM USE OF ANY PRODUCT. BY ORDERING THE CPU MODULE, THE CUSTOMER APPROVES THAT THE RONETIX CPU MODULE, HARDWARE AND SOFTWARE, WAS THOROUGHLY TESTED AND HAS MET THE CUSTOMER'S REQUIREMENTS AND SPECIFICATIONS.